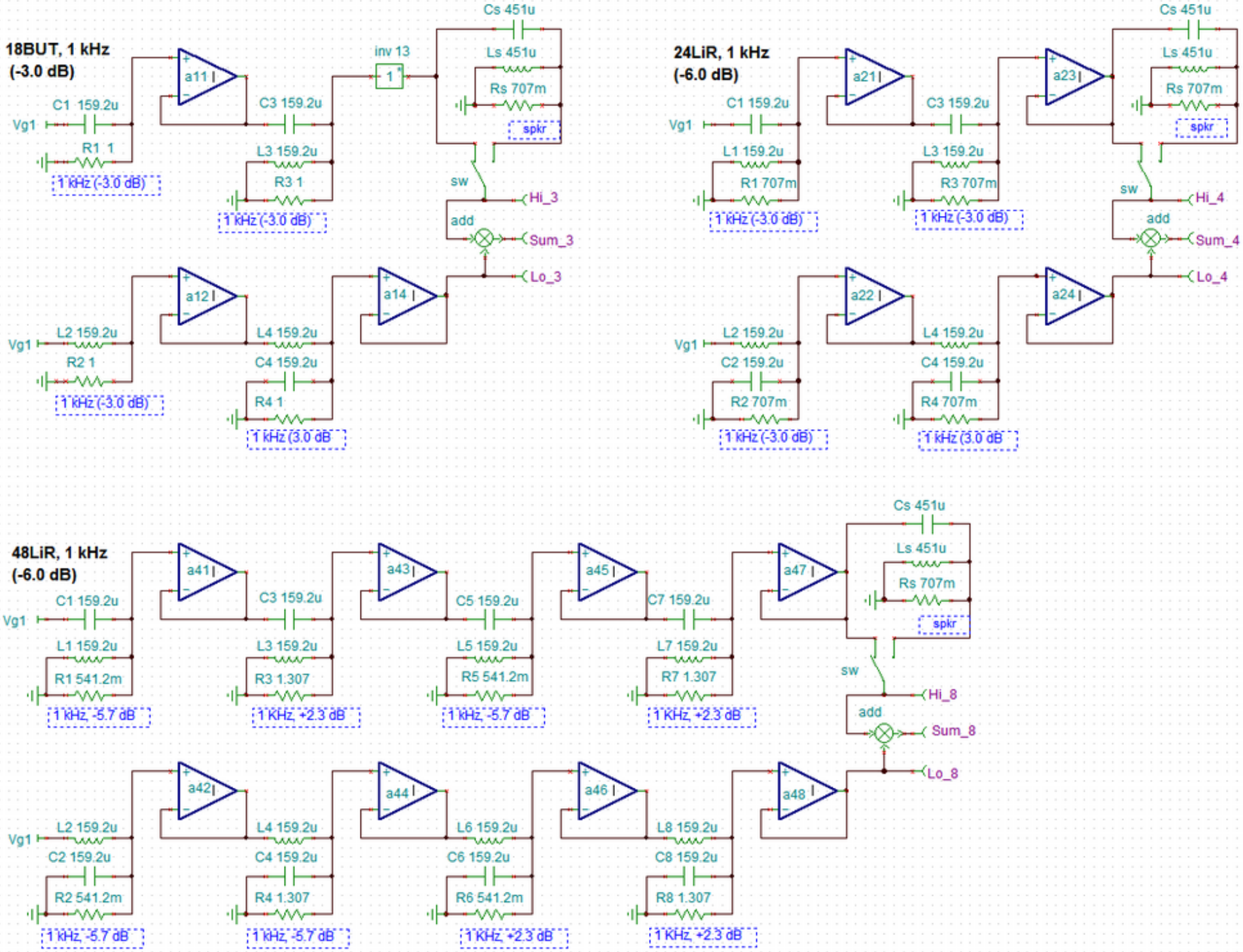
18BUT, 1 kHz
(-3.0 dB)
Vg1
C1 159.2u
R1 1
1 kHz (-3.0 dB)
a11
C3 159.2u
L3 159.2u
R3 1
1 kHz (-3.0 dB)
inv 13
1
Cs 451u
Ls 451u
Rs 707m
spkr
sw
Hi_3
add
Sum_3
Lo_3
a12
a14
L2 159.2u
R2 1
1 kHz (-3.0 dB)
L4 159.2u
C4 159.2u
R4 1
1 kHz (3.0 dB
24LiR, 1 kHz
(-6.0 dB)
a21
a23
C1 159.2u
L1 159.2u
R1 707m
1 kHz (-3.0 dB)
C3 159.2u
L3 159.2u
R3 707m
1 kHz (-3.0 dB)
Cs 451u
Ls 451u
Rs 707m
spkr
sw
Hi_4
add
Sum_4
Lo_4
a22
a24
L2 159.2u
C2 159.2u
R2 707m
1 kHz (-3.0 dB)
L4 159.2u
C4 159.2u
R4 707m
1 kHz (3.0 dB
48LiR, 1 kHz
(-6.0 dB)
a41
a43
a45
a47
C1 159.2u
L1 159.2u
R1 541.2m
1 kHz, -5.7 dB
C3 159.2u
L3 159.2u
R3 1.307
1 KHz, +2.3 dB
C5 159.2u
L5 159.2u
R5 541.2m
1 kHz, -5.7 dB
C7 159.2u
L7 159.2u
R7 1.307
1 KHz, +2.3 dB
Cs 451u
Ls 451u
Rs 707m
spkr
sw
Hi_8
add
Sum_8
Lo_8
a42
a44
a46
a48
L2 159.2u
C2 159.2u
R2 541.2m
1 kHz, -5.7 dB
L4 159.2u
C4 159.2u
R4 1.307
1 kHz, -5.7 dB
L6 159.2u
C6 159.2u
R6 541.2m
1 KHz, +2.3 dB
L8 159.2u
C8 159.2u
R8 1.307
1 KHz, +2.3 dB