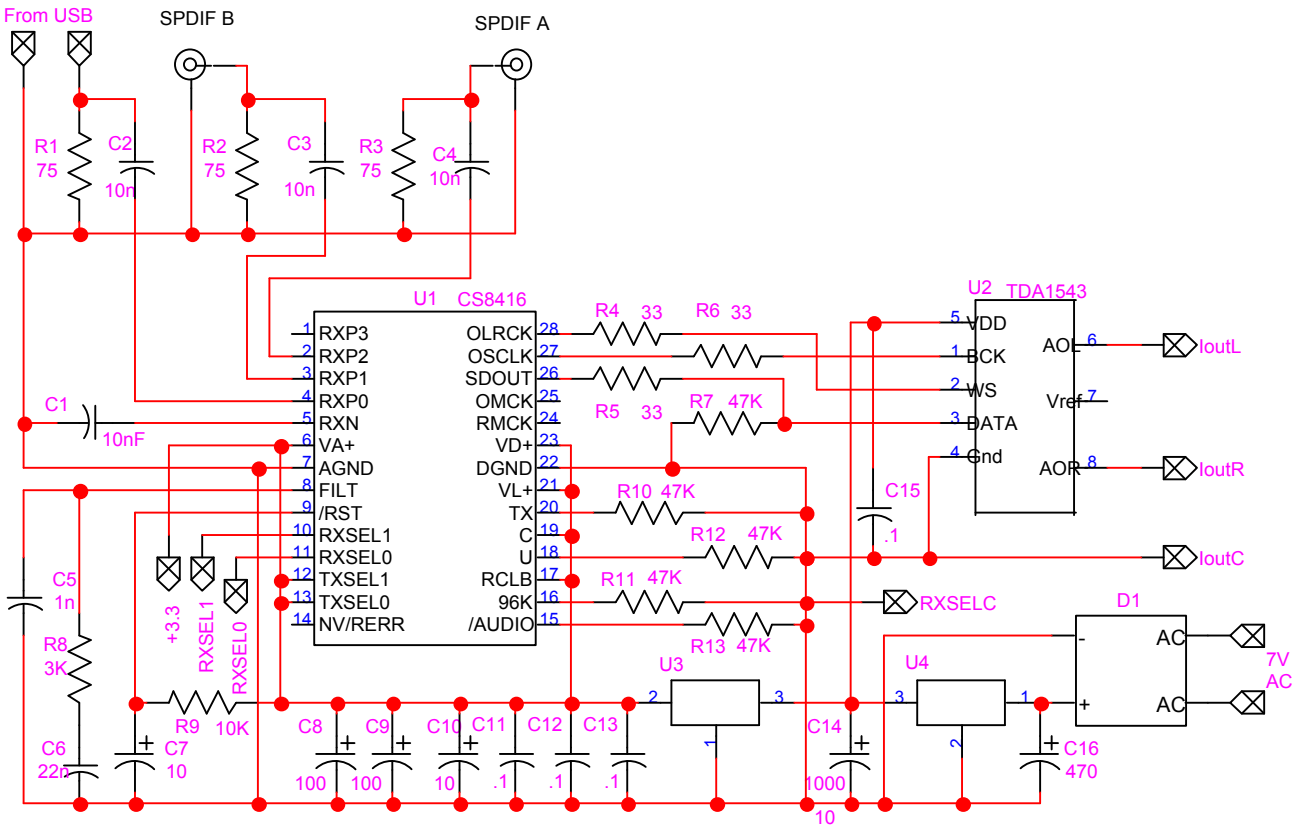
From USB
SPDIF B
SPDIF A
R1 75
C2 10n
R2 75
C3 10n
R3 75
C4 10n
U1 CS8416
RXP3
RXP2
RXP1
RXP0
RXN
VA+
AGND
FILT
/RST
RXSEL1
RXSEL0
TXSEL1
TXSEL0
NV/RERR
OLRCK
OSCLK
SDOUT
OMCK
RMCK
VD+
DGND
VL+
TX
C
U
RCLB
96K
/AUDIO
R4 33
R6 33
R5 33
R7 47K
R10 47K
R12 47K
R11 47K
R13 47K
U2 TDA1543
VDD
BCK
WS
DATA
Gnd
AOL
Vref
AOR
IoutL
IoutR
IoutC
C15 .1
RXSELC
D1
AC
AC
7V AC
U3
U4
C1 10nF
C5 1n
R8 3K
C6 22n
+3.3
RXSEL1
RXSEL0
R9 10K
C7 10
C8 100
C9 100
C10 10
C11 .1
C12 .1
C13 .1
C14 1000
10
C16 470