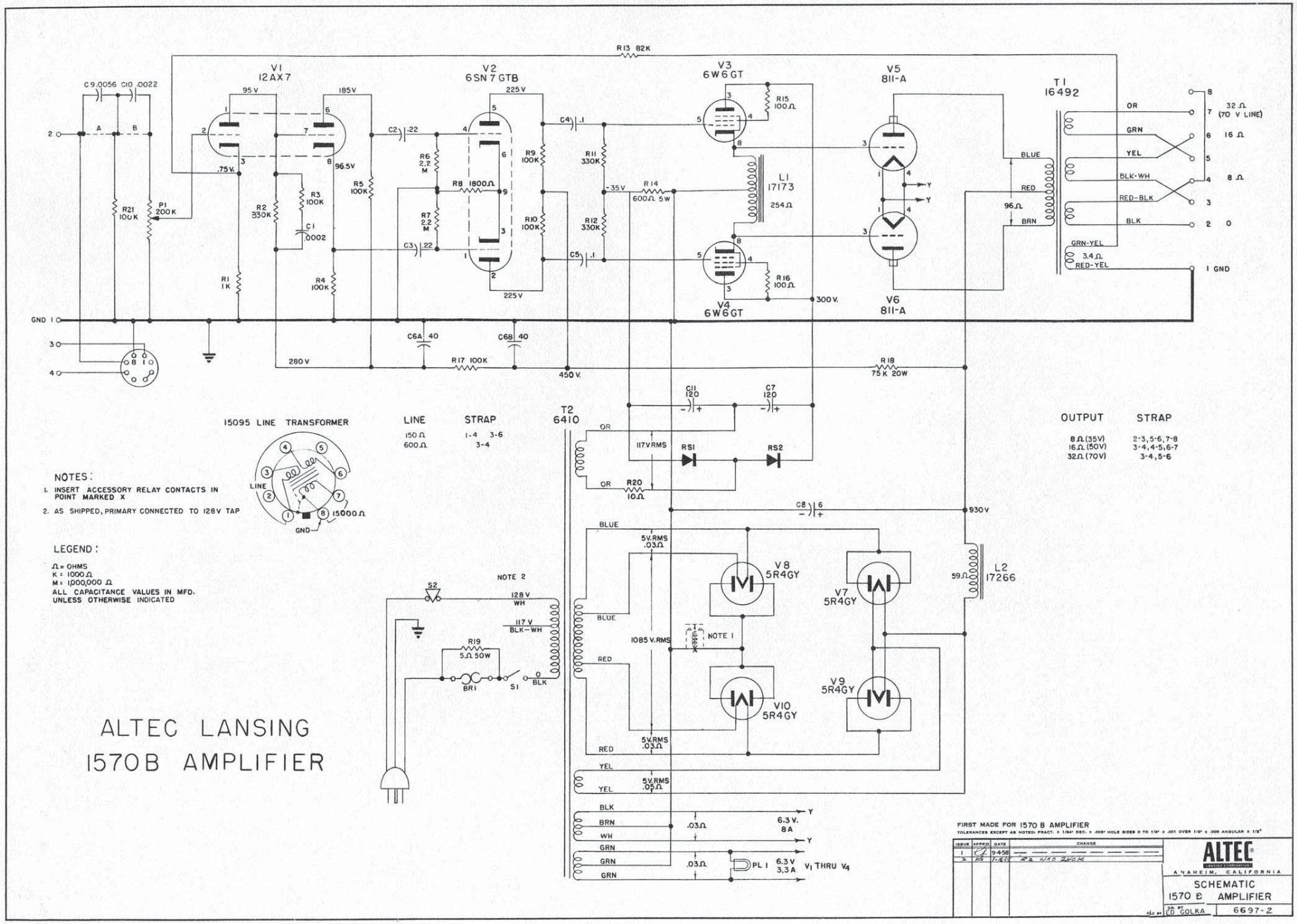
V1 12AX7
V2 6SN7GTB
V3 6W6GT
V4 6W6GT
V5 811-A
V6 811-A
T1 16492
T2 6410
L1 17173
L2 17266
V7 5R4GY
V8 5R4GY
V9 5R4GY
V10 5R4GY
R13 82K
R14 600Ω 5W
R15 100Ω
R16 100Ω
R17 100K
R18 75K 20W
R19 5Ω 50W
R20 10Ω
P1 200K
R21 100K
R1 1K
R2 330K
R3 100K
R4 100K
R5 100K
R6 2.2 M
R7 2.2 M
R8 1800Ω
R9 100K
R10 100K
R11 330K
R12 330K
C1 .0002
C2 .22
C3 .22
C4 .1
C5 .1
C6A 40
C6B 40
C7 120
C8 6
C11 120
C9 .0056
C10 .0022
RS1
RS2
BR1
S1
S2
PL1
OR
GRN
YEL
BLK-WH
RED-BLK
BLK
BLUE
RED
BRN
GRN-YEL
RED-YEL
32Ω (70 V LINE)
16 Ω
8 Ω
0
1 GND
GND 1
300 V.
280 V
450 V.
930 V
117 V RMS
1085 V. RMS
5V. RMS .03Ω
5V. RMS .05Ω
6.3 V. 8A
6.3 V 3.3A
V1 THRU V4
NOTE 1
NOTE 2
128 V WH
117 V BLK-WH
15095 LINE TRANSFORMER
LINE
GND
15000Ω
LINE STRAP
150Ω 1-4 3-6
600Ω 3-4
OUTPUT STRAP
8Ω (35V) 2-3, 5-6, 7-8
16Ω (50V) 3-4, 4-5, 6-7
32Ω (70V) 3-4, 5-6
NOTES:
1. INSERT ACCESSORY RELAY CONTACTS IN POINT MARKED X
2. AS SHIPPED, PRIMARY CONNECTED TO 128V TAP
LEGEND:
Ω = OHMS
K = 1000Ω
M = 1,000,000 Ω
ALL CAPACITANCE VALUES IN MFD. UNLESS OTHERWISE INDICATED
ALTEC LANSING
1570B AMPLIFIER
FIRST MADE FOR 1570 B AMPLIFIER
ALTEC
ANAHEIM, CALIFORNIA
SCHEMATIC
1570 B AMPLIFIER
DR BY ED GOLKA
6697-2